# Average propagation Delay ($T_{AP}$)

- In general, a logic gate takes some time to change states, typically measured in nanoseconds (ns).

- Average propagation delay is the average time it takes for a signal to transition from input to output, calculated as the mean of the low-to-high and high-to-low transition delays ($t_{PLH}$ and $t_{PHL}$) of the output signals with respect to the input signals. This value defines the speed at which an IC can respond to changes in input. For example, consider a NOT gate.

- Both $t_{PLH}$ and $t_{PHL}$ are measured between the 50% points on the <u>input and output transitions.</u>

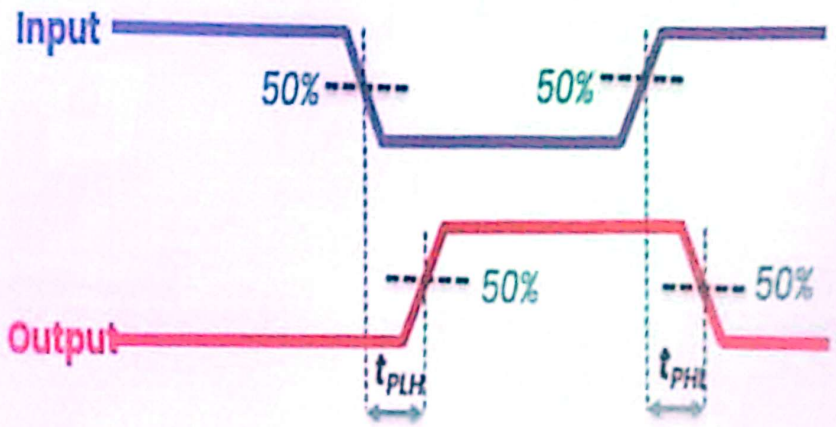


$$T_{AP} = \left(\frac{t_{PLH} + t_{PHL}}{2}\right)$$



CamScanner

- Estimate both the typical and maximum propagation delay from IN to OUT for the following NAND gate (IC, 74LS03 ). Provide a test circuit to measure the propagation delay

**AC CHARACTERISTICS** ($T_A$ = 25°C)

| Symbol | Parameter | Limits | | | Unit | Test Conditions |
|---|---|---|---|---|---|---|
| | | Min | Typ | Max | | |
| $t_{PLH}$ | Turn-Off Delay, Input to Output | | 17 | 32 | ns | $V_{CC}$ = 5.0 V<br>$C_L$ = 15 pF, $R_L$ = 2.0 kΩ |
| $t_{PHL}$ | Turn-On Delay, Input to Output | | 15 | 28 | ns | |

<u>Solution:</u>

$$T_{AP} = \left(\frac{t_{PLH} + t_{PHL}}{2}\right)$$

$$(T_{AP})_{TYP} = \left(\frac{17 + 15}{2}\right) = 16\ ns$$

$$(T_{AP})_{MAX} = \left(\frac{32 + 28}{2}\right) = 30\ ns$$

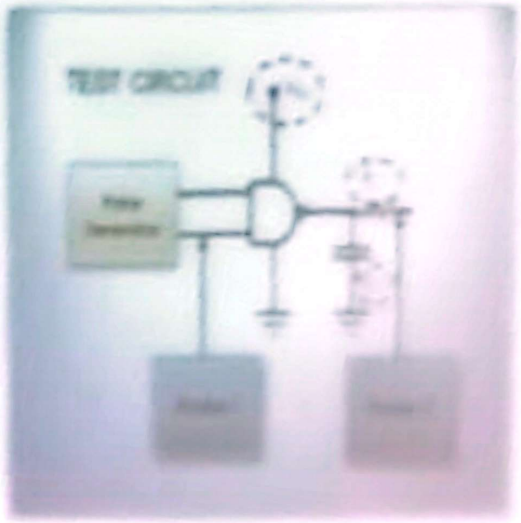




CamScanner

# Power dissipation

- This is the amount of power dissipated in an IC in form of heat
- The total power dissipation of a logic gate is equal to the supply voltage ($V_{CC}$) times average supply current ($I_{CC}$)

$$P_d = V_{CC} \times I_{CC}(average) \qquad I_{CC}(average) = \left(\frac{I_{CCH} + I_{CCL}}{2}\right)$$

- $I_{CCH}$ is the supply current at logic high and $I_{CCL}$ is the supply current at logic low.

## ❑ Power dissipation per logic gates

- This is the ratio between the amount of power dissipated and number of logic gates(n) in the IC

$$P_{dn} = \left(\frac{V_{CC} \times I_{CC}(average)}{n}\right)$$



CamScanner

# Example

- Determine the typical and maximum power dissipation per logic gates for the IC, 74LS03

**GUARANTEED OPERATING RANGES**

| Symbol | Parameter | | Min | Typ | Max | Unit |
|---|---|---|---|---|---|---|
| $V_{CC}$ | Supply Voltage | 54<br>74 | 4.5<br>4.75 | 5.0<br>5.0 | 5.5<br>5.25 | V |

**DC CHARACTERISTICS OVER OPERATING TEMPERATURE RANGE** (unless otherwise specified)

| | | | | | | |
|---|---|---|---|---|---|---|
| $I_{CC}$ | Power Supply Current<br>Total, Output HIGH | | | 1.6 | mA | $V_{CC}$ = MAX |
| | Total, Output LOW | | | 4.4 | | |

Solution:

$$I_{CC}(average) = \left(\frac{1.6 + 4.4}{2}\right) = 3\ mA$$

$$P_{d\,typ} = V_{CC} \times I_{CC}(average)$$

$$= 5 \times 3 = 15\ mW$$

$$P_{d\,typ} = \left(\frac{V_{CC} \times I_{CC}(average)}{n}\right)$$

$$= \frac{15}{4} = 3.75\ mW$$

Similarly

$$P_{d\,max} = 3.94\ mW$$



CamScanner

# Fan-out

- The fan-out of a gate refers to the number of similar gates it can drive without affecting the normal operation of the given circuit.
- A higher fan-out is desirable, as it allows a single gate to drive a larger number of gates.
- It essentially defines the current supply capability of the given gate.

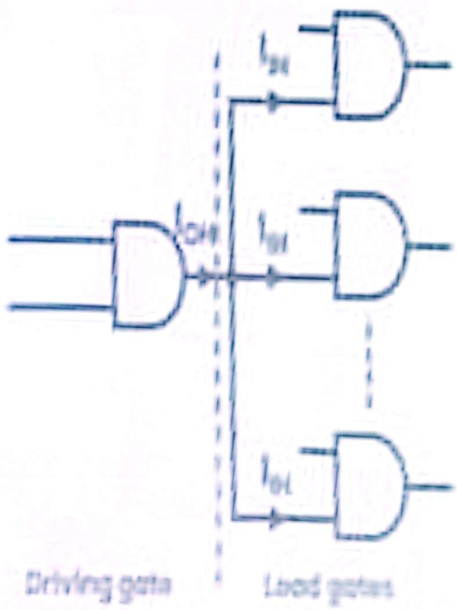


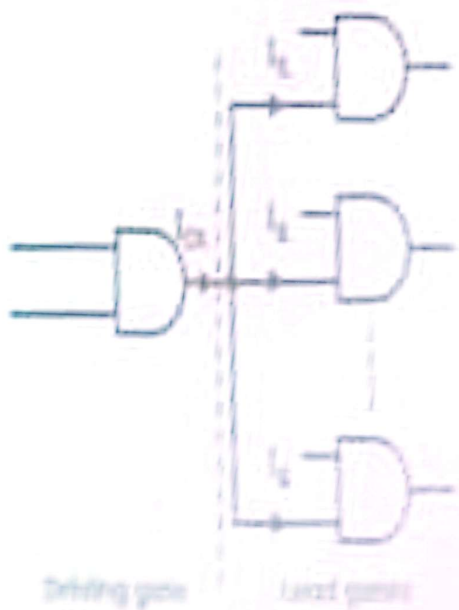


High state fan-out $= \left| \frac{I_{OH(max)}}{I_{IH}} \right|$

Low state fan-out $= \left| \frac{I_{OL(max)}}{I_{IL}} \right|$